Tolerance If Not Specified							
Not Machined		1<x=6	10<x=30	30<x=100	100<x=300	300<x=1000	1000<x=2000
Machined	Fine	±0.05	±0.1	±0.15	±0.2	±0.3	
Machined Smooth	Medium	±0.1	±0.2	±0.3	±0.5	±0.8	±1.2
Mirror	Coarse		±0.5	±0.8	±1.2	±2.0	±3.0

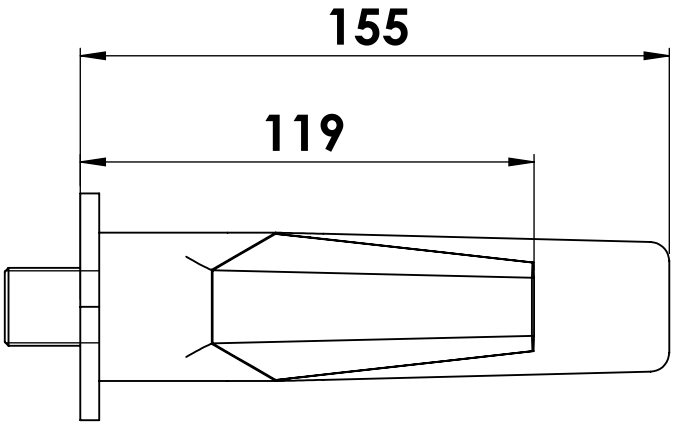

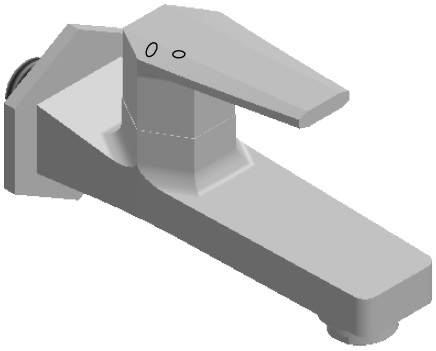

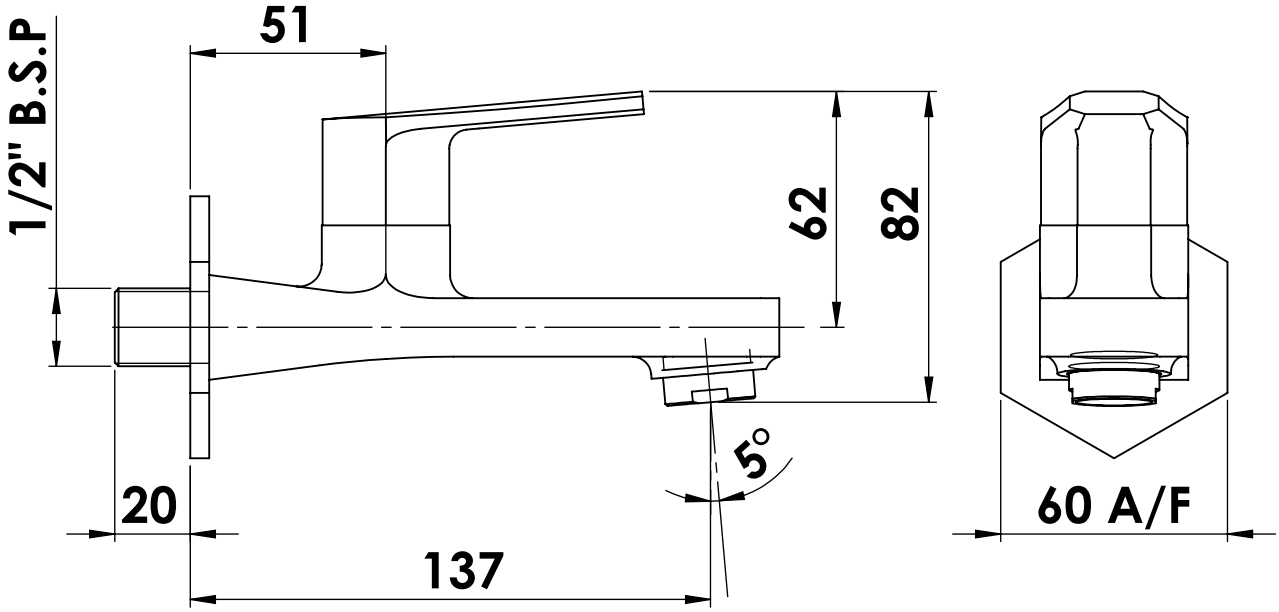

OBBC101

Rev. Date	Revision	Revision Description

All projections are shown in series

All dimensions are in mm

* Indicates critical feature

asianpaints

Asian Paints Limited
6A, Shantinagar Santacruz (East) Mumbai 400055

Drawn	Munish	Title	**BIB COCK WITH WF**		
Checked		Type	Technical	Range	Obelisk
Approved		Material			
Date	27.12.2018	Drg No.	**FOBSBBCCPFL01**		
Weight		**This Drawing & Design is Property Of APL. It is Confidential Document Must Not Be Copied Or Used in Any Manner to Their Interest.**			
Scale	1:5				