Tolerance If Not Specified							
Not Machined		1<x=6	10<x=30	30<x=100	100<x=300	300<x=1000	1000<x=2000
Machined	Fine	±0.05	±0.1	±0.15	±0.2	±0.3	
Machined Smooth	Medium	±0.1	±0.2	±0.3	±0.5	±0.8	±1.2
Mirror	Coarse		±0.5	±0.8	±1.2	±2.0	±3.0

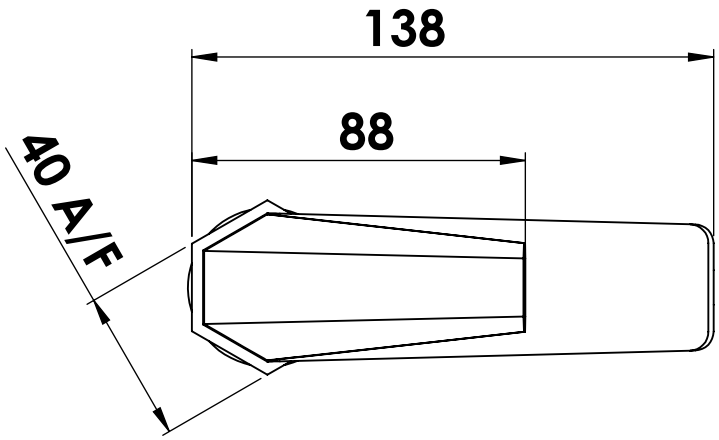

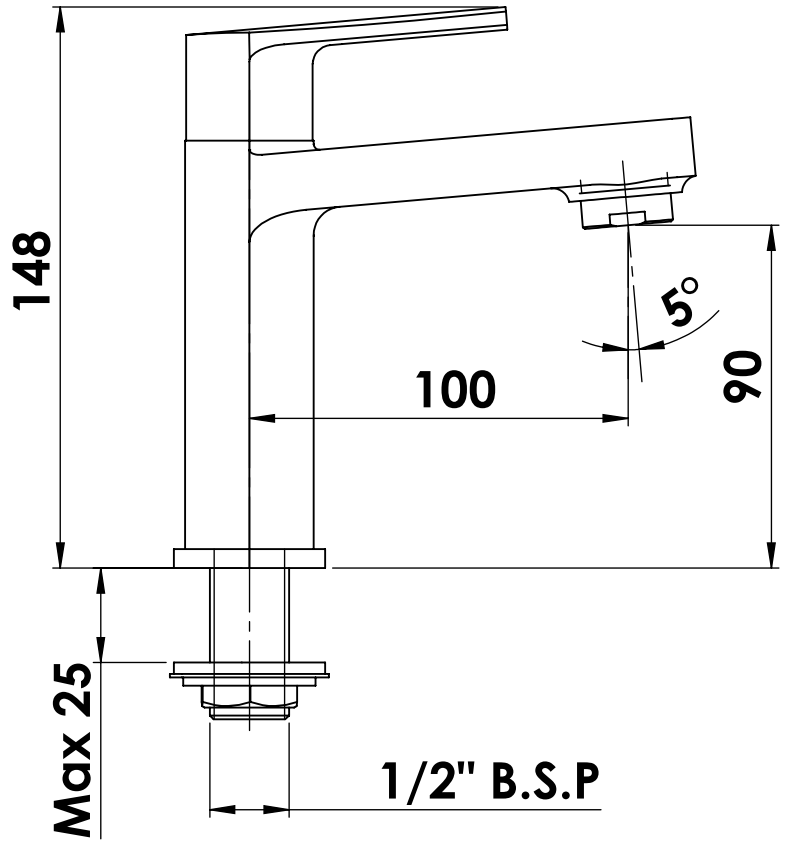

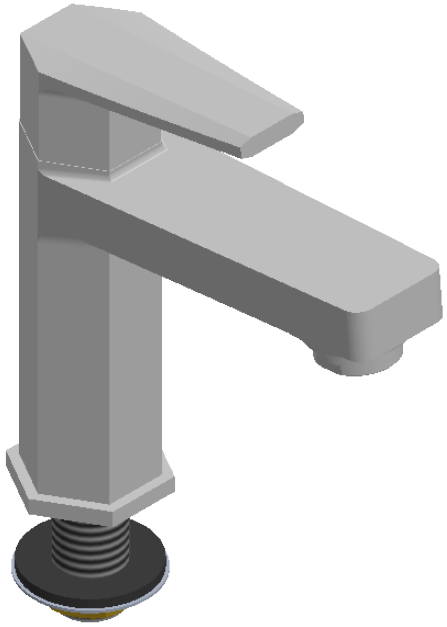

OBPC101

Rev. Date	Revision	Revision Description
All projections are shown in series		asianpaints — Asian Paints Limited, 6A, Shantinagar Santacruz (East) Mumbai 400055
All dimensions are in mm		
* Indicates critical feature		Title: **PILLAR COCK**
Drawn	Munish	
Checked		Type: Technical — Range: Obelisk
Approved		Material:
Date	27.12.2018	Drg No.: **FOBSBPCCPFL01**
Weight		**This Drawing & Design is Property Of APL. It is Confidential Document Must Not Be Copied Or Used in Any Manner to Their Interest.**
Scale	1:2	